Medical SMF wireless foot switch
MKF 3 SMF2.4-MED GP311
Article no.: on request

Product features

- Wireless signal transmission per steute wireless SMF2.4-MED
- Transparent data transfer with service-based approach
- Cybersecurity by design from the outset
- Power supply via 3 commercially available batteries (AA)
- Typical battery life: over 1 year
- With back-up cable
- Battery compartment can be opened by hand
- Additional push buttons for extra functionality (optional)
- Collapsible stainless steel carrying handle (optional)

Notes
- Photo shows optional accessories.

Dimensions

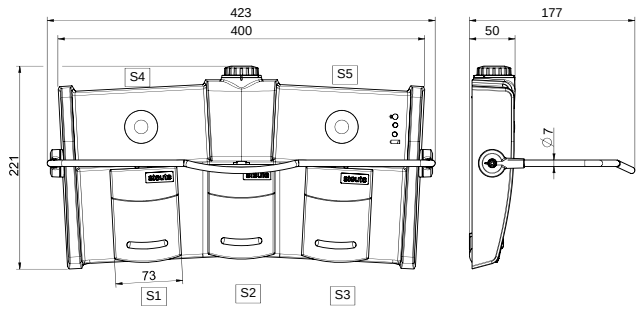

General technical data

Applied standards
IEC 60601-1, IEC 60601-1-2, ANSI/AAMI ES60601-1, IEC 62304, IEC 60529, ETSI EN 301 489-17

Pedal
thermoplastic, shockproof, self-extinguishing UL 94 V-0/V-2

Housing
thermoplastic, shockproof, self-extinguishing UL 94 V-0, Pantone Cool Gray 1C

Antenna
internal antenna

Degree of protection
IPX8 (IEC/EN 60529)

Switching elements
micro switch

Switching system
2 NO contact

Interfaces
RS232

Mechanical life
> 1 million operations

Conformity
Global: cCSAus IEC 60601-1, -1-2, -2-22, -2-43
Europe: CE EN 300 328; EN 62479
USA: FCC, Part 15C, Identifier: XK5-SMF241
Canada: IC RSS-247, Identifier: 5158A-SMF241

Wireless technology

Frequency
ISM 2.4 GHz band

Channel bandwidth
2 MHz

Modulation type
GFSK, adaptive frequency hopping of 40 channels

Output power
0 dBm - 7.5 dBm

Input sensitivity
-91 dBm

HF data rate
2 Mbps

Wireless range
max. 30 m

Voltage supply

Voltage source
3 commercially available batteries, type AA

Battery life
> 1 year

Errors and omissions excepted.

Medical SMF wireless foot switch
MKF 3 SMF2.4-MED GP311
Article no.: on request

Note

- Since this article is part of a medical product, it can only be validated in combination with the overall system. Proof of conformity to the Medical Device Regulation (MDR 2017/745) can therefore only be handled by the customer marketing the system. At the request of the customer, steute can affix a CE mark with the 4-digit number of the appropriate notified body.

Errors and omissions excepted.